Ultraminature Automotive PCB Twin Power Relay — PC566

FEATURES

- Internal H-Bridge
- Uniquely Designed for DC Motor Controlled
- Ultraminiature Design very Light Weight
- Sensitive Coil (Low Pull In Voltage) Available
- Contact Switching Capacity up to 25 Amps
- Sealed, Immersion Cleanable
- UL Class F Insulation available
- RoHS Compliant
- Available as a Dual see PC567

UL / CUL Ratings

Contact Form	2 X Form C (H-Bridge) 2 X DPDT (H-Bridge)
Max Switching Current	30 A
Max Switching Power	480 Watts
Max Switching Voltage	16 VDC
Max Continuous Current	25 A
Motor Locked Rotor	25 A at 14 VDC

CONTACT DATA

Material		$AgSnO_2$
Service Life	Electrical	1 x 10^5 Operations
	Mechanical	1 x 10^6 Operations

CHARACTERISTICS

Operate Time	10 ms Max
Release Time	5 ms Max
Insulation Resistance	100 MΩ min at 500VDC,
Dielectric Strength	500 V 50 Hz between contacts 500 V 50 Hz between coil and contacts
Shock Resistance	100 m/s² 11 ms Functional
	100 m/s² 11 ms Functional
Power Consumption	640 mW, 800 mW

CHARACTERISTICS Continued

Vibration Resistance	10 Hz - 500 Hz; Acceleration: 43.1 m/s²
Terminal Strength	5 N
Solderability	260°C for 5 seconds
Operating Temperature	-40°C to 85°C Standard
Operating Temperature	-40°C to 85°C Standard
Relative Humidity	85% (40°C)
Weight	7.5 g

ORDERING INFORMATION

Example: PC566 -2C -12 H -X

Model:	**PC566**
Contact Form:	**2C:** 2 X 1C (H-Bridge)
Coil Voltage:	**12**
Coil Power:	**Nil**: 0.64 W; **H:** Sensitive 0.80 W
Insulation System:	**Nil**: -40° C to +85° C; **F**: -40° C to +105° C*
RoHS Compliant:	**-X**

Box Quantity:1,000; 20 Per Tube

*White cover and suited for reflow soldering

14680 James Road, Rogers, MN 553745 USA
Sales: (763) 535-2339
www.PickerComponents.com
e-mail: sales@pickercomponents.com

Dimensions are listed for reference purposes only.

Specifications and Availability subject to change without notice.

COIL DATA

Coil Voltage (VDC)		Resistance (Ohms ± 10%)	Must Operate Voltage Max (VDC)	Must Release Voltage Min. (VDC)	Coil Power (mW)
Rated	Max				
12	16	225	7.2	1.0	640
12H	16	180	6.5	1.0	800

NOTES:

The use of any coil voltage less than the rated voltage will compromise the operation of the relays.

Must Operate Voltage and Must Release voltages are for test purposes only and are not to be used as design criteria.

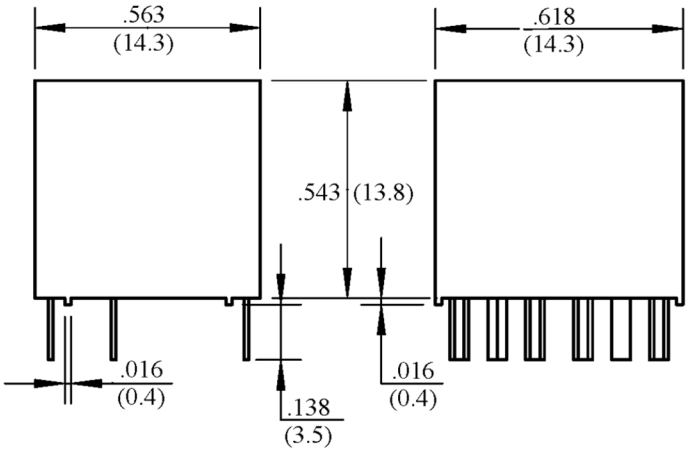

Relay (Front View)

Relay (Side View)

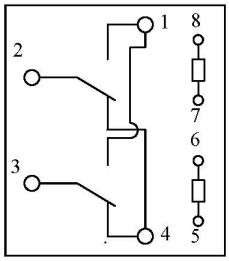

Wire Diagram

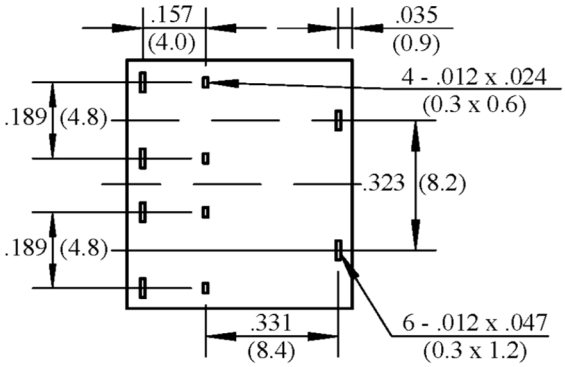

Terminal Layout (Bottom View)

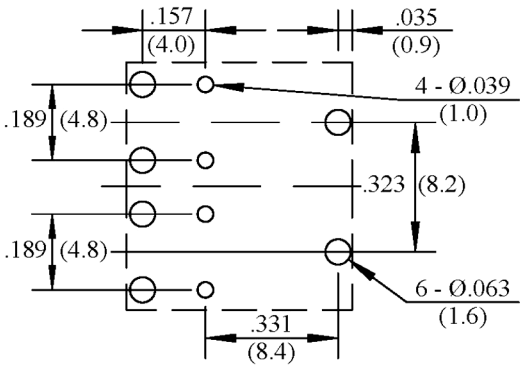

PC Board Layout (Top View)

PICKER® 14680 James Road, Rogers, MN 553745 USA
Sales: (763) 535-2339
www.PickerComponents.com
e-mail: sales@pickercomponents.com

Dimensions are listed for reference purposes only.

Specifications and Availability subject to change without notice.